Design of a Large Heat Lift 40 to 80 K Pulse Tube Cryocooler for Space Applications

T. Trollier[1], J. Tanchon[1], J. Buquet[1], A. Ravex[1], I. Charles[2], A. Coynel[2], L. Duband[2], E. Ercolani[2], L. Guillemet[2], J. Mullié[3], J. Dam[3], T. Benschop[3], and M. Linder[4]

1AIR LIQUIDE Advanced Technology Division, AL/DTA
Sassenage, France
[2]CEA/DSM/DRFMC, Service des Basses Températures, CEA/SBT
Grenoble, France
[3]THALES Cryogenics BV
Eindhoven, The Netherlands
[4]European Space Agency, ESA/ESTEC
Noordwijk, The Netherlands

ABSTRACT

A Large heat lift Pulse Tube Cooler (LPTC) is under development in partnership with AL/DTA, CEA/SBT and THALES Cryogenics. The engineering model is expected to provide 2.3 W at 50 K at a 10 °C rejection temperature and 160 watts of electrical input power to the compressor. The split coaxial design of the pulse tube cold finger and the moving magnet linear motor compressor design will be presented. The expected thermal and mechanical performances will be also discussed. The engineering model will be delivered to ESA/ESTEC in October 2006 after completion of a qualification test program. This work is funded by the European Space Agency (ESA/ESTEC Contract N°18433/04/NL/AR) for future earth observation instrument missions.

INTRODUCTION

The successful development of the Miniature Pulse Tube Cooler (MPTC)[1,2] was driven by the need to cool detectors arrays at 80 K. In the meantime, there is a need for earth observation missions to cool thermal infrared detectors below 60 K. At these temperatures, the cooling power of the MPTC, or the space qualified 50-80 K Stirling cooler from EADS-Astrium UK Ltd, is marginal or not sufficient. In order to provide European coolers for the temperature range of 40-60 K, a Large Heat Lift Pulse Tube Cooler LPTC is required, in addition to the MPTC. Beside the fact that the formal space qualification is outside the scope of the present phase, the current LPTC is designed to a very high level of maturity. The main technical specifications from the Agency are summarized in Table 1.

For the mechanical loads specified, the LPTC is designed and will be tested with an additional mass of 50 g attached at the cold tip during the performance of all mechanical profiles.

Cryocoolers 14, edited by S.D. Miller and R.G. Ross, Jr.

Table 1. LPTC technical specifications summary.

Cooling power @ 50 K / rejection temperature	2.3 W / 283 K
Electrical input power to the compressor	160 Wac max.
Transfer tube	20 to 50 cm
Mechanical cooler mass	< 5.5 kg
Lifetime	5 years min. 10 years goal
Sinusoidal loads (3 axis, 2 oct/min, 1 sweep-up)	[5-20.5 Hz] +/- 12 mm peak
	[20.5-60 Hz] / 20 g peak
	[60-100 Hz] / 8 g peak
Random loads (3 axis, Composite 13.1 grms, 2.5 min/axis)	[20-100 Hz] / +3 dB/oct.
	[100-300 Hz] / 0.3 g^2/Hz
	[300-2000 Hz] / -5 dB/oct.
Shock loads (3 axis)	200 Hz / 200 g
	600 Hz / 800 g
	2000 Hz / 2000 g
	10000 Hz / 2000 g
Acceptance temperature limits	Min. -20°C / Max. +50°C

DEVELOPMENT PHASE

During this phase, pulse tube cold finger development models (DMs) have been designed, manufactured and tested to optimize the pulse tube dimensions and the regenerator composition. In-line configuration has been used for the cold finger to easily modify the geometry. Common materials, such as stainless steel and pure copper, have been implemented for the tubes and for the heat exchangers shown in the Figure 1. Water cooling is provided at both the hot end of the regenerator and the tube. All of the DMs have been operated in an inertance mode, which was also tuned for each configuration experimented.

The cooling performance is reported in Figure 2 for three different configurations of the regenerator grading. The configuration 1 uses a stainless steel graded regenerator matrix with the cold part filled with a high surface density and low porosity meshes. For the configurations 2 and 3, the same cold part as the previous configuration has been retained but the hot part of the matrix has been filled high porosity and low surface density meshes. All the tests have been performed with 107 W of compressor work (PV work), 30 bars filling pressure and a 288 K warm end rejection temperature (provided by water cooling).

In Figure 2, it is noticed that the grading sensibly impacts the no-load temperature and the 40 K cooling performance, which is not the case for 50 K operation. In order to offer better performance at 40 K, we finally selected the grading used in the configuration 1 for the design of the EM.

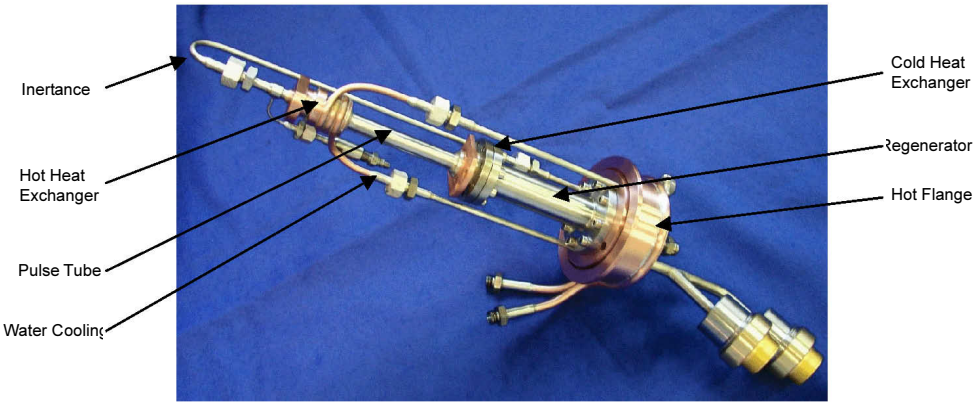

Figure 1. In-line pulse tube cold finger development model.

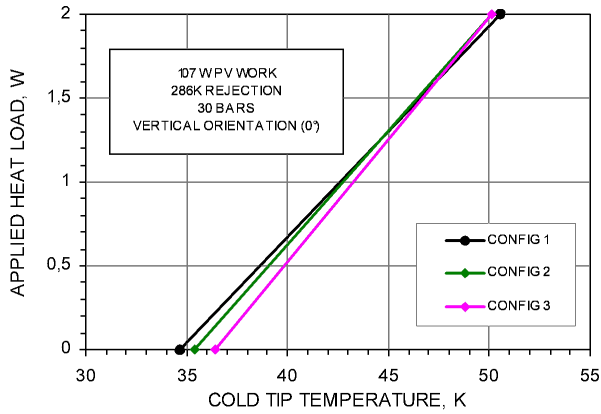

Figure 2. In-line pulse tube cold finger Development Model.

ENGINEERING MODEL DESIGN

Pulse Tube Cold Finger EM

The pulse tube cold finger EM configuration is a coaxial configuration that was determine by the trade-off performed with the support/approval of ESA/ESTEC. With maturity gained in the coaxial pulse tube design and manufacturing, a U shape configuration becomes less attractive. Furthermore, it seems possible to achieve a similar level of performance with a coaxial configuration as with an in-line configuration. The coaxial configuration offers an advantage in term of mass, reliability, simplicity, which makes it very attractive for space applications.

A CAD view of the coaxial cold finger is seen in Figure 3. The hot flange subassembly is mainly composed of an aluminium alloy warm end flange and heat exchangers. This alloy benefits from the previous experience on the MPTC with the Electron Discharge Machining (EDM) technique for the manufacturing the heat exchangers. The hot flange integrates the heat rejection zone for heat sinking. The heat transfer will be performed via conduction. The specific thermal conductivity of the aluminium alloy is 50% higher than pure copper and a little less than pure aluminium. Finally, aluminium will allow for higher thermal contact conductance.

The coaxial architecture will be used in an inertance mode, which was previously used on the DM phase and is commonly used in our pulse tube coolers. The inertance is wounded inside the titanium alloy buffer volume, which is attached to the warm end to produce a compact assembly.

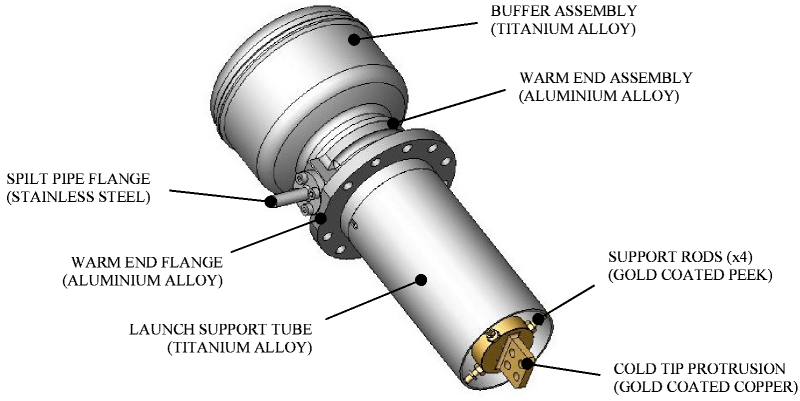

Figure 3: CAD view of the LPTC cold finger EM

The cold tip is made of Oxide Free High Conductivity Copper (OFHC) material optimized to both the thermal conductivity at 50 K, and the brazing process for the titanium alloy regenerator tube. The material exhibits the highest thermal conductivity at 50 K. OFHC is widely used in cryogenic applications. It offers a good resistance to corrosion and is compatible with high vacuum levels.

In order to reduce the radiative heat exchange between the cold tip and the surroundings at ambient temperature, a gold coating is used. This coating enhances the conductance of the thermal contact during the thermal heat transfer via conduction with the attached load (or thermal strap). As shown in the Figure 3, a launch support is used. It is composed of a Titanium Alloy Ti-6Al-4V tube, which is bolted to the warm end flange. Four threaded thermoplastic Peek™ rods are used to center and to lock the cold tip under warm conditions during mechanical loading (launch). They are screwed into the copper cold block. Stainless steel nuts are to lock the Peek™ rods. This design is used to suppress any lateral motion of the cold tip for maximal robustness. Furthermore, it suppresses the shocks that can occur when using of a snubber (which allows a small lateral motion due to non-contacting parts). During the cooling down phase, due to thermal contraction of the cold tip, there is no more contact in our design and the thermal performance is optimal.

Compressor EM

The compressor unit consists of two pistons that reciprocate head-to-head into the same compression chamber (dual opposed pistons) to optimize the compactness of the system. Each piston is supported by a bearing that consists of two flexure spring packs (each one made of two flexures), located at the front and at the rear of the piston. The pistons are driven by linear motors powered by a sinusoidal input current provided by an external electronics unit. The linear motors consist of a moving magnet attached to the piston and a static coil external to the helium working fluid. The mounting system provides high radial stiffness and allows for movement along the piston/cylinder axis over a wide range of piston amplitudes and radial mechanical loads. High reliability and long lifetime are ensured by the adoption of the following design features:

- The compressor achieves a dynamic pressure seal by the maintenance of a very small non-contacting clearance between piston and cylinder. The absence of contact between the piston and the cylinder eliminates this major cause of degradation, which can result from rubbing contact.
- The only components in the design that are subjected to fatigue are the flexure springs that suspend the pistons. Careful design ensures that these flexures are subjected to a stress well below their high cycle fatigue threshold and ensure a very long lifetime.
- The coils are placed out of the working fluid, which eliminates the main contamination source and the use of helium tight electrical feed-throughs, which are a major cause of helium leakage. Furthermore, the use of static coils suppresses the risk of failure due to the breaking of flying lead connections and wires.

Welding techniques or metal seals are implemented to seal the compressor sto minimize the helium leak rate and the associated contamination by a reverse diffusion processe.

Each motor makes use of radially magnetized segmented neodymium iron bore magnets. The magnet length has been optimized to get a constant axial force function of the amplitude of the piton displacement. AWG20 space qualified wire MW-35-C is used as round copper wire for the static coils. The motor efficiency for a compressor work of 60 W per coil (total compressor 120 W) is calculated to be 78.4% for 30°C coil temperature and 76.1% for 70 °C coil temperature (both temperatures correspond respectively to the nominal work point and the ambient worst case operating temperature).

As in the previous MPTC product, the center part is made of aluminium alloy. The feasibility analysis of the AlBeMet aluminium alloy concluded negatively on this part. The feasibility analysis has been pushed to cast materials, such as BERALCAST 191 or BERALCAST 363, and these materials can be used in future flight models, if necessary. Stiffeners have been added to the center part in order to increase the first natural frequency above the 8th harmonic (thus above 495 Hz for 55 Hz

fundamental driving frequency). The stiffeners include interface for thermal anchorage of extra thermal straps, if required (Figure 4). The mechanical interface has been adapted to implement force transducers interfaces. The coil holder endplate are made from titanium alloy Ti-6Al-4V. This material has been selected because of its high specific mechanical characteristics and its high electrical resistance, which decreases the eddy current losses in the coil holder. The endplate will be EB-welded to the coil holder. The mechanical anchorage of the compressor unit is performed by the compressor base plate and no additional bracket is required. The compressor base plate provides four (4) holes for force transducers mounting (load washers). In the event that the the load washers are not flown in the application, the mechanical and thermal interfaces are merged. In this case the eight (8) holes foreseen for the thermal anchorage are used. The base plate surface provides a total area of 170 cm^2 of nickel plated aluminium alloy with a roughness < 0,8 µm. An interface for an accelerometer sensor is placed on one (1) endplate. Thus, the EM compressor can cope with both methodologies commonly used for vibration cancellation, accelerometer and force transducers. It shall be clearly noticed here that the selection of one or the other methodology is of CDE and mission scenario concerns. Finally, an LVDT interface has been implemented on one (1) endplate in order to be able to measure the piston amplitude during the test phase of the LPTC EM for the present contract. The LVDT transducer will not be used anymore for other phases of the product (qualification and flight).

MECHANICAL ANALYSIS

The LPTC cooler, including the moving parts, and the shaker adaptor have been entirely meshed (Figure 5) with NASTRAN software. The shaker interface has been designed to provide a good

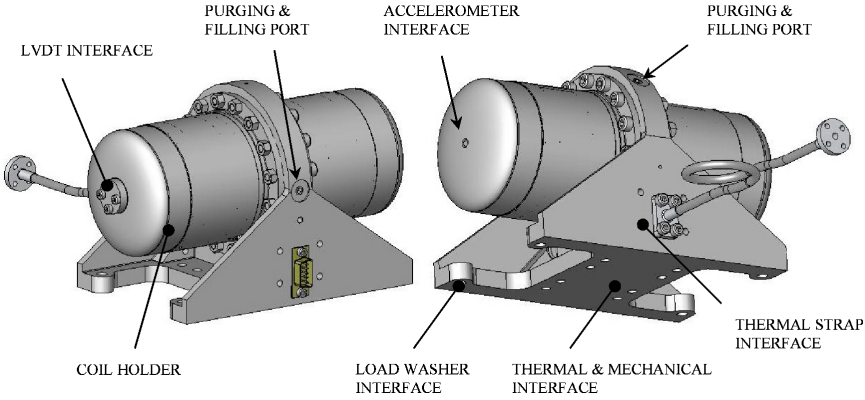

Figure 4. CAD views of the LPTC compressor Engineering Model.

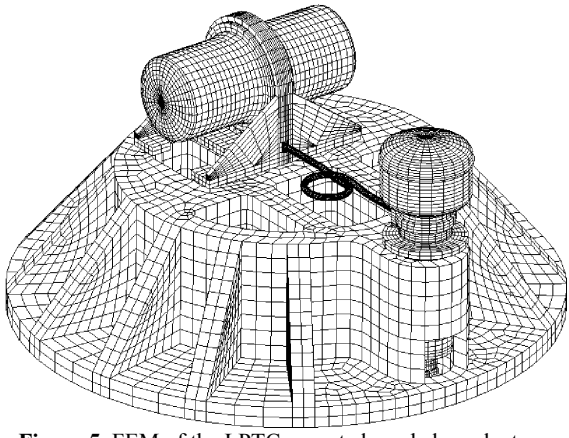

Figure 5. FEM of the LPTC mounted on shaker adaptor.

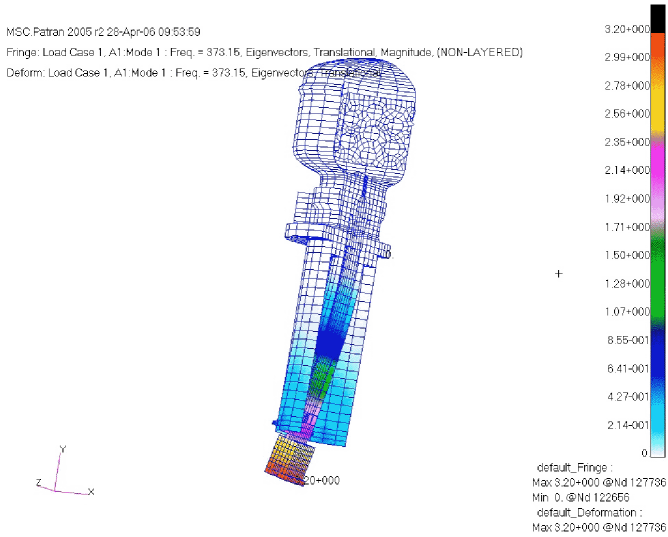

Figure 6. Bending mode of the LPTC EM cold finger – 373 Hz.

input control at the LPTC interfaces during the mechanical tests. The normal modes analysis indicates that the first mode is found above 1750 Hz when loaded with the LPTC cooler mass.

The coupled thermal and mechanical optimization of the cold finger concluded on a first bending mode rejected above 370 Hz (Figure 6), including the 50g additional mass attached at the cold tip which are also meshed. This mode is located above both critical frequencies of 60 Hz, corresponding to the highest sine load of 20 g, and 300 Hz corresponding to the highest random power spectra density of 0.3 g^2/Hz (refer to table 1) giving huge confidence in the design against the specified mechanical loads.

For the compressor considered mounted on the four (4) load washers, the first mode is a bending mode of the center part which is found at 350 Hz (Figure 7). This mode disappears for a compressor mounted on its entire base plate, . The second mode found, whatever the mounting considered, is a bending mode of the cylinders at 648 Hz.

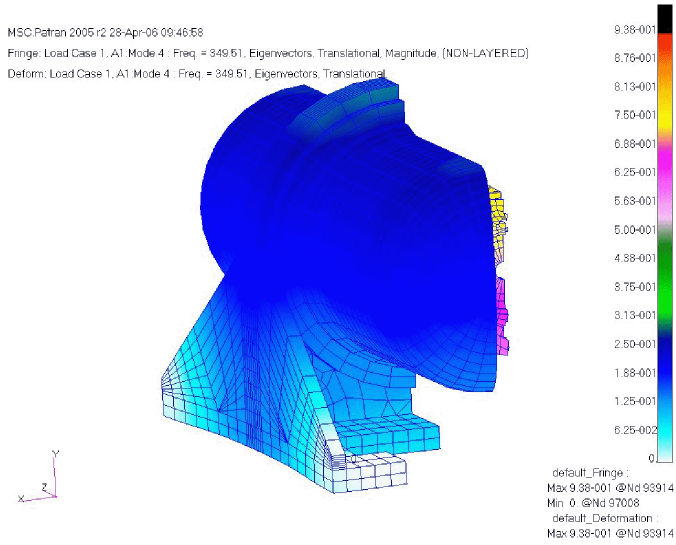

Figure 7. Bending mode of the center part of the LPTC EM compressor – 350 Hz.

Finally, considering a 1% critical damping ratio (amplification factor Q=50), the mechanical analysis shows positive margins of safety for all profiles performed in each of the 3 perpendicular axis. This gives a lot of confidence in the robustness of the LPTC.

EM MANUFACTURING AND ASSEMBLY

Figure 8 shows the warm end parts prior to the final assembly. The inertance is tuned to the final optimal length using a dedicated warm end flange tooling. The inertance subassembly is composed of 316L stainless steel inertance tube, which is wounded and secured on a dedicated inertance support. The inertance subassembly is screwed inside the buffer, which is made of two Electron Beam welded titanium alloy Ti-6Al-4V parts.

Figure 9 shows the cold finger assembly. The copper cold tip and the titanium alloy regenerator tube are high vacuum brazed prior to gold coating. The regenerator tube is EB welded on the flange prior to the regenerator stacking. Finally, the cold finger cold part and the buffer assembly (including inertance) are bolted together on the warm end flange. Two (2) metallic delta seals are used for helium tightness. The insulation of the cold finger and the setting of the launch support tube (not shown in the Figure 9) are the final steps of the assembly.

The compressor assembly is shown in the Figure 10 without the split pipe and the LVDT transducer. The center part is coated with electroless nickel according to MIL-C-26074 Grade A for corrosion protection. The compressor has been submitted to acceptance testing while connected to a Stirling cold finger. Without a pressure charge, the resonance frequency is a little higher than expected (44.5 Hz compared to 40.7 Hz) due to a slightly higher magnetic stiffness. The final

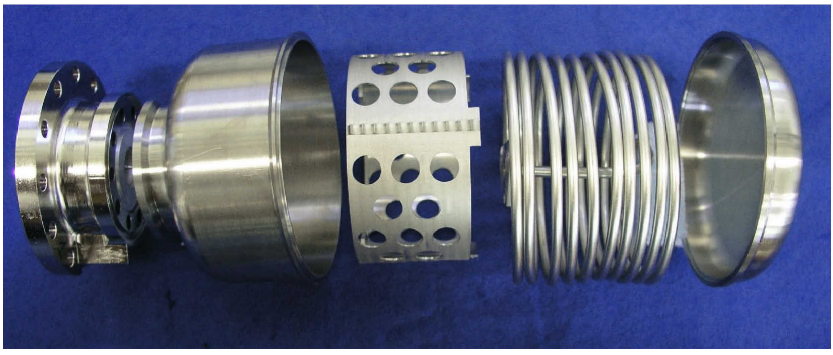

Figure 8. Warm end, inertance and buffer exploded view prior to final assembly.

Figure 9. LPTC cold finger EM assembly without launch support tube.

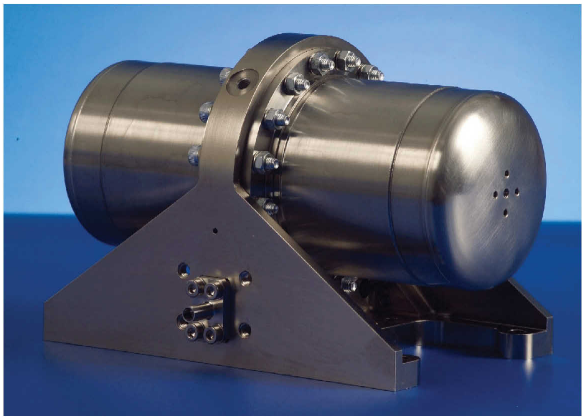

Figure 10. LPTC compressor EM assembly without split pipe.

resonant frequency will be known once coupled with the pulse tube cold finger damping. Based on the cryogenic test results performed with a Stirling cold finger, the compressor efficiency is found to be 75.6 %. Beside the fact that the eddy current losses are a little bit higher than expected, the efficiency is in good accordance with the prediction. The mass of the compressor hardware, including split pipe, is 4.14 kg.

CONCLUSIONS

A Large Heat Lift Pulse Tube Cooler (LPTC) has been designed to provide 2.3 W of cooling capacity at 50 K with a maximum of 160 W of input power. The Engineering Model has been designed and optimized for the mechanical loads of a Ariane V launcher. The expected performances is a cooling capacity of 2.3 W at 50 K for 155 W input power at a drive frequency of 55 Hz.

The parts have been procured and assembled. The total mass is less than 5.1 kg. The cold finger is currently under final tuning prior to a thermal vacuum and mechanical test program. The Engineering Model will be delivered to the ESA/ESTEC in November 2006.

ACKNOWLEDGMENT

We acknowledge the financial and technical support of the European Space Research and Technology Centre (European Space Agency/ESTEC, Contract No 18433/04/NL/AR).

REFERENCES

1. Trollier, T., Ravex, A., Charles, I., Duband, L., Mullié, J., Bruins, P., Benschop, T., and Linder, M., "Miniature 50 to 80 K Pulse Tube Cooler for Space Applications," *Cryocoolers 12*, Kluwer Academic/Plenum Publishers, New York (2003), pp. 165-171.

2. Trollier, T., Ravex, A., Charles, I., Duband, L., Mullié, J., Bruins, P., Benschop, T., and Linder, M.,"Performance Test Results of a Miniature 50 to 80 K Pulse Tube Cooler," *Cryocoolers 13*, Kluwer Academic/Plenum Publishers, New York (2003), pp. 93-100.