Development of a Diaphragm Pressure Wave Generator for Cryocoolers

A.J. Caughley[1], C. Wang[2]

[1] Industrial Research Ltd.
Christchurch 8053, New Zealand

[2] Cryomech Inc
Syracuse, NY 13211

ABSTRACT

This paper describes the continuous development and improvement of a low-cost industrial-style pressure wave generator that employs metal diaphragms. The improved pressure wave generator has been connected to a pulse tube cold head with a short transfer tube for endurance testing. It has now been operated more than 2000 hours without compressor failure or performance degradation. Accelerated testing predicts a diaphragm lifetime in excess of 40,000 hours. In order to reduce size, cost and mechanical noise from the linkage driving the diaphragms, a hydraulic driven mechanism has also been developed. It demonstrates similar compressor performance and efficiency to that achieved with the lever-driven mechanism.

INTRODUCTION

Low-cost long-life cryogenic refrigerators (cryocoolers) are critical for making viable products with High Temperature Superconductor (HTS) technology. The US DOE roadmap for cryogenic development as an enabling technology for HTS in industrial and power applications [1] has posed a considerable challenge to the cryogenic refrigeration industry.

Stirling type pulse tube cryocoolers have shown it is possible to fabricate simple, low cost and reliable cold heads in the refrigeration power ranges of 100 to 1000 W at 80 K as required by HTS products [2,3]. Such pulse tubes are typically powered by large oxford style pressure wave generators employing linear motors, flexure bearings, and clearance-gap pistons in resonance. Oxford style pressure wave generators are efficient, however the cost of these machines is currently too high to enable HTS to penetrate the power industry.

Industrial Research Ltd has been developing a low-cost industrial-style pressure wave generator since 2005. Industrial Researches pressure wave generator employs metal diaphragms to provide a flexing seal. The use of diaphragms removes the need for rubbing or clearance seals, and eliminates contamination problems by hermetically separating the gas circuit and the lubricated driving mechanism. A conventional low-cost electric motor and a novel high-efficiency kinematic linkage is used to reciprocate the diaphragm producing the pressure wave. The specification of the prototype diaphragm pressure wave generator is listed in Table 1. A first prototype of the diaphragm pressure wave generator, when coupled directly to a pulse tube developed by American Supercon-

Cryocoolers 15, edited by S.D. Miller and R.G. Ross, Jr.

Table 1. Specification for PWG prototype

Swept Volume	200 ml
Total Piston Stroke	2.5mm
Operating speed	30-60Hz
Maximum average pressure	25 Bar
Maximum Pressure wave	10 bar (peak to peak)
Motor	5.5kW standard 2 pole, 3 phase electric motor.

ductor Corp, produced 3.2 kW of PV power with a measured electroacoustic efficiency of 72% [4]. This pulse tube cryocooler has been successfully run at Industrial Research Ltd to 59 K with the diaphragm PWG. A second, identical, pressure wave generator prototype was made and used by Cryomech to develop a coaxial pulse tube refrigerator with a transfer line. Cryomech's first design achieved 108 W of cooling at 77 K with an electrical input power of 3.7 kW as detailed in their paper [5]. A beta prototype pressure wave generator was manufactured in 2007 [4]. The beta prototype was based on a cast aluminium crankcase and utilized the same linkage and diaphragms as previous prototypes.

This paper describes recent improvements and an endurance test of the pressure wave generator. An alternative hydraulic force amplification mechanism is introduced for moving the diaphragms. The hydraulic driving system has the potential to reduce cost, weight, and noise in the device.

DIAPHRAGM PRESSURE WAVE GENERATOR WITH A PULSE TUBE COLD HEAD AND TRANSFER TUBE

The diaphragms in the pressure wave generator are driven by a motor crank mechanism as described in reference [4]. The non-resonant mechanical drive means that it can be operated efficiently over a wide range of speeds. It is important to note that the drive is a constant swept volume device. Therefore acoustic power (PV power) generated and efficiency are primarily functions of the connected load. The acoustic load used to test this prototype PWG was a pulse tube developed by American Superconductor Corp [6]. In the tests detailed herein, a short transfer tube was used to connect the pulse tube to the pressure wave generator as illustrated by Figure 1. The transfer tube was 457 mm long and 19mm diameter. A heat exchanger, or aftercooler, was connected between the transfer tube and regenerator. The transfer tube significantly reduced the acoustic power transferred to the pulse tube as compared with the direct coupling used in previous work [4]. The reduction in power was due to a combination of a lowered pressure ratio, from 1.38 to 1.30 (6% reduction), and a 10 degree change in the phase angle between pressure and displacement (responsible for a 22% PV power reduction). The PV power absorbed was reduced from 3.2 kW [4] at 50 Hz to approximately 2.2 kW with a corresponding loss in efficiency. The resultant pressure wave, though lacking power, was of sufficient magnitude to load the pressure wave generator mechanism. The transfer tube's greatest benefit was its ability to quickly connect and disconnect the pulse tube to the pressure wave generator. This greatly aided development and reduced wear on the pulse tube from repeated assembly.

IMPROVEMENTS

In 2007, a beta prototype pressure wave generator was displayed at the Cryogenic Engineering Conference [4]. This pressure wave generator incorporated the same diaphragms and internal lever mechanism as the previous prototypes. A cast aluminum crankcase was used instead of the original bolted plate construction, and an internal water circuit was used to cool the oil. The 2007 prototype represented a great improvement over previous prototypes in manufacturability and reliability.

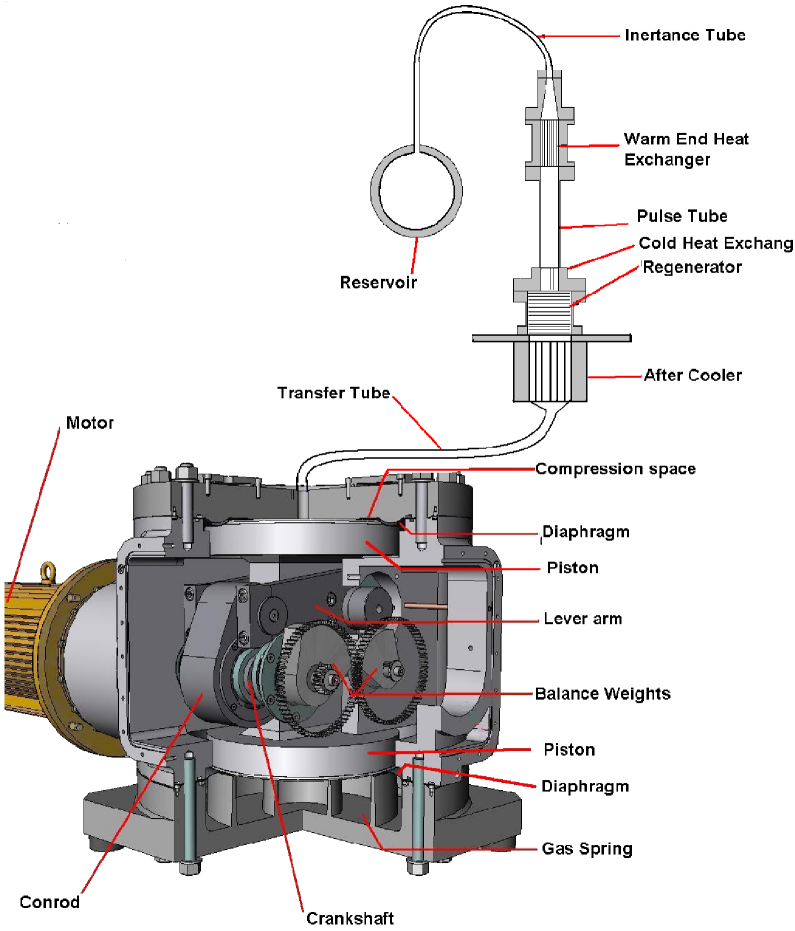

Figure 1. Pressure Wave Generator with pulse tube arrangement for endurance test.

Weight Reduction

The beta prototype weighed 210 kg, without the motor. Weight reduction has been achieved by hollowing out the crankshaft, gudgeon pin, and main pivot pin, drilling holes in non-stressed parts of the lever arm, and removing excess material from the crankcase. The final weight of the pressure wave generator is now 193 kg, a saving of 17 kg. No loss of performance has been measured.

Oil Circulation

The oil circulation system in the pressure wave generator has two functions. The first is to lubricate the lever pivot bearings, and the second is to remove heat from the lever mechanism and the diaphragm. In the 2007 beta prototype, cooling water channels were machined into the casting and cover plates to cool the oil that splashed around inside the machine as illustrated in Figure 2(a). The oil pump was mounted on the front cover plate, driven off the crankshaft by a pair of gears. Whilst effective and elegant, this arrangement proved to be costly and difficult to assemble. An improved circulation system has now been designed, as illustrated in Figure 2(b), where the oil pump is mounted on the motor plate and driven off the end of the balance shaft. The oil filter is now external to the crankcase, aiding maintenance and assembly. A conventional external oil cooler is used. Filter and cooler are located neatly beside the motor.

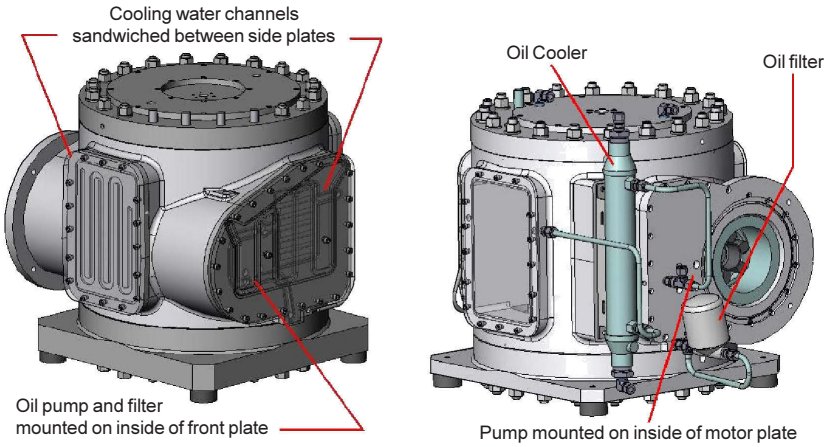

Figure 2. a) Oil cooling in side covers and b) external filter and cooler.

ENDURANCE TEST

An endurance test was performed on the pressure wave generator prototype. The prototype was run with the pulse tube, shown in Figure 1. The test was performed at 50 Hz with average pressure varying between 20 and 24 Bar. The pressure variation was due to a slow leak in the pulse tube system requiring the gas to be replenished every week. The prototype had accumulated 316 hours running before the test. Between August 8th and November 5th 2007, 1754 hours of running were achieved with no diaphragm or mechanism failure. Added to the previous running, the prototype had run for 2070 hours. As shown in Figure 3, the pressure ratio remained between 1.30 and 1.31 throughout the tests, indicating consistent operation of the pressure wave generator. Mechanical noise remained constant at 80 ±1 dB throughout the test.

More than 3.7×10^8 reverse bending cycles have been accumulated on the diaphragms to date. This is in the order of the 10^8 cycles commonly cited as 'infinite life' in fatigue analysis [7].

Accelerated fatigue tests of the diaphragm material, 430 Stainless Steel, were conducted [4] showing that the material has an 'infinite' fatigue life at design stresses up to 450 MPa. The longevity of diaphragms is confirmed by Cooke-Yarborough who ran a Stirling engine using a diaphragm with a similar diameter and stroke to our pressure wave generator continuously at 110Hz for 12 years [8].

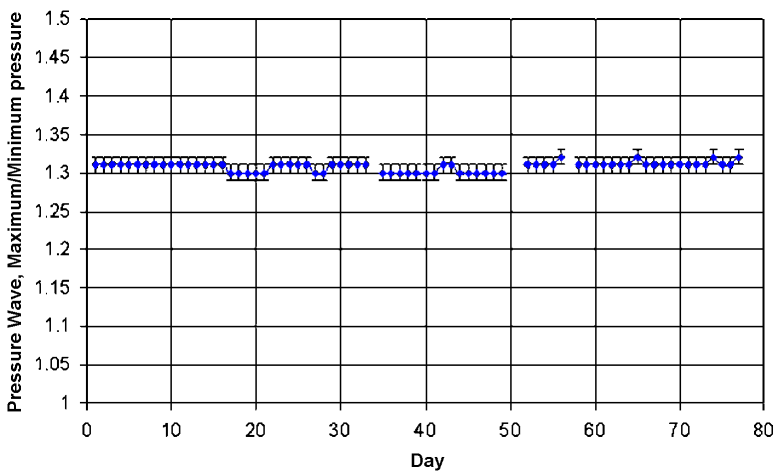

Figure 3. Pressure ratio during endurance testing.

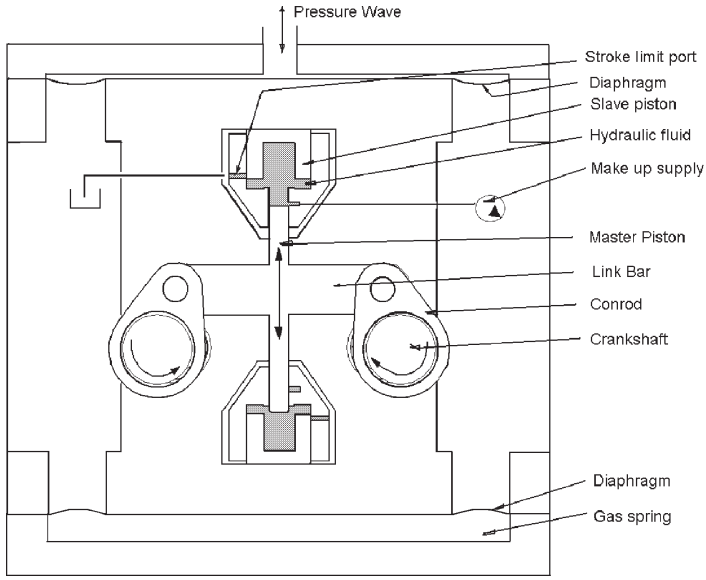

Figure 4. Hydraulic Lever concept

These results give us a confidence for continuously operating the diaphragm pressure wave generator for >40,000 hours.

ALTERNATIVE FORCE AMPLIFIER

The force on the diaphragm due to the pressure wave can be considerable, up to 50 kN for the prototype made. This force is transferred through the pivot bearings of the lever mechanism. The high reciprocating loads, in combination with the necessary clearances in the journal bearings of the lever mechanism, are a potential source of noise which is amplified by the diaphragm. An alternative method of force amplification is proposed which replaces the mechanical lever with a hydraulic system that achieves leverage through closely coupled pistons of different areas. Potential benefits of a hydraulic system are compactness, greater leverage ratio, lighter components, less cost, and less noise.

Implementation of the hydraulic concept is shown in Figure 4. A pair of shafts are connected with a single set of gears to provide counter rotation. Each shaft has a conrod which is connected to a common link bar. The rotation of the shafts moves the link bar up and down in a reciprocating motion. The link bar moves a pair of small 'master' pistons. The master pistons reciprocate in their cylinders displacing hydraulic oil in a reciprocating manner which in turn moves a respective pair of larger 'slave' pistons. The lever ratio is determined by the area ratios of the master and slave pistons. Because Hydraulic systems push and not pull, one master/slave pair pushes the diaphragm piston up and the other master/slave pair pushes it down. Piston drift is controlled by bleeding off oil via a port that opens if the slave piston travels too far at its extension. Make up oil is fed via a port that opens when the master piston is fully contracted.

A prototype pressure wave generator was made with the hydraulic lever system. It had identical diaphragms, compression space and gas spring to the mechanical lever prototype. They were both connected to the same pulse tube used in the long-run test mentioned above. Figure 5 shows the comparative performance between the two systems over a range of speeds and average gas pressures. The hydraulic system proved itself capable of generating the same acoustic (PV) power as the lever system with marginally more power consumption. The hydraulic oil was able to provide a smooth pressure wave up to speeds of 50 Hz, validating the concept.

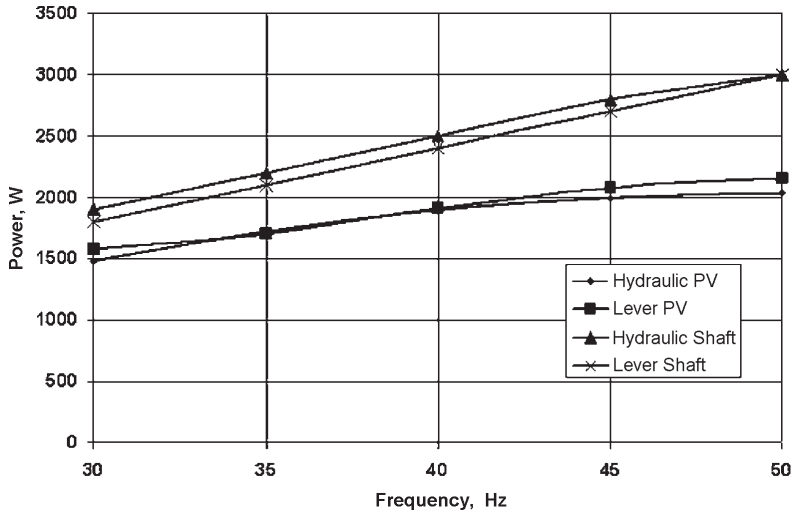

Figure 5. Hydraulic system compared with Lever system. 20 Bar average gas pressure.

Table 2. Mechanical Efficiency of Lever and Hydraulic drive systems. Average pulse tube gas pressure was 20 bar.

Operating frequency		30 Hz	35 Hz	40 Hz	45 Hz	50 Hz
Mechanical efficiency	Lever drive	88%	81%	80%	77%	72%
	Hydraulic drive	78%	79%	76%	71%	68%

Table 2 gives a comparison of the mechanical efficiency of the lever drive and hydraulic drive systems. At 50 Hz the mechanical efficiencies of the two systems are similar, however the hydraulic system was much less efficient at lower frequencies.

The prototype of the diaphragm pressure wave generator with hydraulic driven mechanism requires more development before it is ready to be incorporated into a commercial device. One key area for development is controlling piston drift. Initial tests were very noisy as the slave piston bleed ports were not capable of fully controlling piston drift and the diaphragm pistons were hitting the limits of their travel. Work is continuing on finding the best combination of bleed rates, leakage, port size and pressure wave magnitude in the hydraulic oil.

More work is necessary to improve the hydraulic system's efficiency. In the prototype, the conrod big end bearings were pressure fed journals. Journal bearings are simple, reliable and easy to assemble, but have approximately one order of magnitude more friction than rolling element bearings. Efficiency improvement will be gained by replacing the conrod big end journal bearings with low friction rolling element bearings.

CONCLUSION

We have demonstrated a low cost pressure wave generator that, by using metal diaphragm seals, can provide a pressure wave to a cryocooler while separating the clean working gas from a conventionally lubricated mechanical drive.

Accelerated fatigue tests, and a 2000 hour prototype run have demonstrated the long fatigue life of the metal diaphragm and give confidence in the longevity of the mechanical driving mechanism.

An alternative hydraulic force amplifier has the potential to be used to replace the lever in the diaphragm pressure wave generator. The hydraulic system was able to produce a smooth movement and equivalent pressure wave to the current mechanical lever system at 50 Hz. The hydraulic system has the potential to further reduce the cost and weight of the diaphragm pressure wave generator.

ACKNOWLEDGMENT

The authors acknowledge Industrial Research Ltd, New Zealand for continued support of this work, New Zealand's Foundation for Research Science and Technology for funding, American Superconductor Corp for their help, encouragement and loan of a pulse tube, Cryomech for helping test the device and providing customer focus and finally HTS-110 for supporting the commercialization of the device.

REFERENCES

1. Sheahen T.P., McConnell, B., "Cryogenic Roadmap," US Department of Energy Superconductivity Program for Electric Systems, 2000.
2. Zia Jalal, H., "A pulse tube cryocooler with 300W refrigeration at 80K and an operating efficiency of 19% Carnot," *Cryocoolers 14*, ICC Press, Boulder, Colorado (2007), pp. 141-147.
3. Potratz, S.A., Abbott, T.D., Johnson M.C., and Albaugh, K.B., "Stirling-type pulse tube cryocooler with 1 kW of refrigeration at 77 K," *Advances in Cryogenic Engineering*, AIP, Melville, New York (2008), vol. 53, pp. 42-50.
4. Caughley, A., Haywood, D., Wang, C., "A Low Cost Pressure Wave Generator Using Diaphragms," *Advances in Cryogenic Engineering*, 53B, AIP, Melville New York (2008), pp 1122-1129.
5. Wang, C., Caughley, A., Haywood, D., "Development of a Low Cost High Frequency Pulse Tube Cryocooler," *Advances in Cryogenic Engineering*, 53B, AIP, Melville New York (2008), pp 1555-1564.
6. Yuan, J., Maguire, J.,"Development of a Single Stage Pulse Tube Refrigerator with Linear Compressor," *Cryocoolers 13*, Kluwer Academic/Plenum Publishers, New York (2005), pp. 157-161.
7. Hamid, A.A, Yahya, R.K., "Influence of fretting on the fatigue strength at the vise-clamp specimen interface," *Bull. Mater. Sci* **25** (2003), pp. 749-754.
8. Cooke-Yarborough, E.H., "A 60 watt thermomechanical generator as the main power source for a major lighthouse," *Proc Xth Int Conf on Lighthouses and other aids to navigation (IALA),* Tokyo, Nov 1980.