Graphite Foam as a Cryogenic Heat Exchanger

N.J. Keltner, T.I. Mulcahey, S.M. Ghiaasiaan

Georgia Tech Cryo Lab, Georgia Institute of Technology
Atlanta, GA 30332

ABSTRACT

Metal foams have recently been studied in a variety of heat transfer applications, and could greatly reduce the weight of heat exchanger modules in superconductor cooling systems while simultaneously providing increased heat transfer effectiveness.

Superconductors present great potential for weight reduction and increased power delivery when compared to traditional copper power delivery systems, but current systems require cryogenic cooling systems. Traditional superconductor cooling systems consist of helium cooled by helical heat exchangers made of Oxygen Free High thermal Conductivity (OFHC) copper tube. Aluminum and Copper foams have been available for several years, but more recently, graphite foams, such as PocoFoam™, have been developed which have particularly good heat transfer characteristics.

Using Computational Fluid Dynamics (CFD) to model a cryogenic heat exchanger application, the effectiveness and pressure drop of several metal foam heat exchangers were examined and compared with that of a traditional helical coil design. The CFD simulation results show that a metal or graphite foam based heat exchanger with the same heat sink contact area as existing helical heat exchangers weighs up to 95 percent less and can be up to 25 percent more effective, depending on system conditions such as pressure, cryogenic cooler temperature and helium inlet temperature.

INTRODUCTION

Cryogenic processes have been significantly developed over the last 50 years and play an increasingly important role in a variety of industries, including production of liquefied natural gas (LNG), rocket propulsion, food processing, metal tempering, biomedical applications, and cooling for superconductors. As these industries begin to rely increasingly on cryogenic fluids, the reduction of costs and improvement in heat exchanger effectiveness associated with cryogenic processes becomes increasingly important.

Cost reduction in cryogenic processes will be intrinsically linked to the efficiency and weight of components in the cryogenic process, particularly heat exchangers. Superconductor research has indicated a large potential weight savings by replacing heavier traditional copper conductors with superconducting materials. However, superconductors require a cryogenic cooling system to maintain conductor integrity. Traditional heat exchangers, with designs

Cryocoolers 18, edited by S.D. Miller and R.G. Ross, Jr.

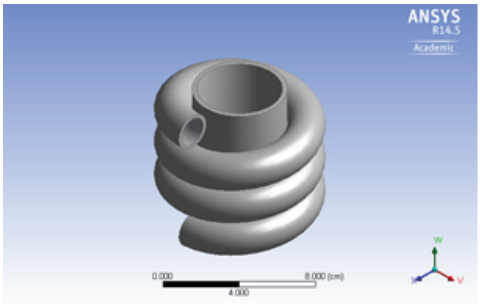

Figure 1. Helical heat exchanger model

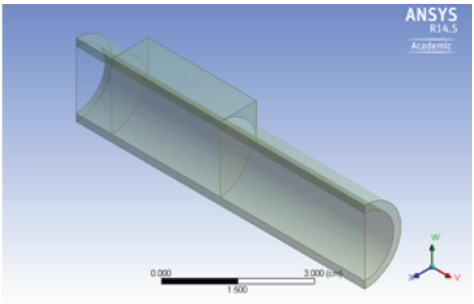

Figure 2. Foam heat exchanger cross section

similar to that shown in Figure 1, rely on contact between a copper cold core and helical copper tubing containing the working fluid wrapped around the cold core. These traditional heat exchangers operate with around 70% effectiveness and are bulky [1]. The low effectiveness results in the need for significant power input to the cryogenic cooler system to obtain desired levels of cooling. Heat exchanger power input and heat exchanger effectiveness are considerable challenges for macro scale applications.

This study examines the potential application of two metal foams and one graphite foam (PocoFoam) as heat exchanger elements in superconductor cooling applications. Using ANSYS 14.5 [2], extensive simulations were performed to study the feasibility of using metal foams in superconductor cooling applications. Two metal foam heat exchangers, one PocoFoam heat exchanger, and one traditional helical heat exchanger were modeled. The geometry of the helical heat exchanger is shown in Figure 1, and a section view of the geometry for the three foam heat exchangers is shown in Figure 2. Each metal foam heat exchanger consisted of a two-centimeter diameter pipe with a cryogenic cooler attached perpendicularly to the system. Adjacent to the cryogenic cooler, a metal foam insert was situated inside the pipe, measuring three centimeters in length. The three models of this configuration differed only in the type of foam used as an insert: aluminum, copper or graphite PocoFoam. Each system was simulated for a variety of inlet and cryogenic cooler temperatures. The effectiveness and pressure drop incurred by each system were then compared. Finally, the weight of the helical coil based system was compared to the weight of the metal foam heat exchanger systems.

OBJECTIVE CRYOCOOLER DESIGN

The pipe walls and cryogenic cooler application tip were modeled as OFHC copper, and the characteristics published by NIST [3] were used. Thermal conductivity and heat capacity for OFHC copper are highly temperature dependent in the cryogenic range considered in this study. For simplicity, the NIST equations were used to obtain seven discrete points over the temperature range considered, and a seven-point piecewise linear representation of these properties was entered into the material definition parameters in Fluent. The exact values used in this study are shown in Table 1.

The aluminum foam studied is made of 6061-T6 Aluminum. NIST published values for the 6061-T6 Aluminum were used to create a seven-point piecewise linear curve to represent material properties. The thermal conductivity and specific heat data points used in the seven-point curve for 6061 are listed in Table 2.

The values in Table 1 were used for the properties of the pipe as well as the copper foam. For porous regions, ANSYS Fluent modifies the density and thermal conductivity to account for porosity using Eqs. (1) and (2).

$$\hat{k} = \varepsilon \hat{k}_f + (1-\varepsilon)\hat{k}_s \tag{1}$$

Table 1. Properties for OFHC copper used in CFD model

	10K	20K	30K	50K	70K	90K	100K
Specific Heat [J/kg-K]	0.099	7.506	26.474	96.269	135.879	205.1	255.3
Thermal Conductivity [W/mK]	320.4	1368	1444.4	863.56	670.02	500.3	443.9
Density [kg/m^3]				8941			

Table 2. Properties for 6061-T6 aluminum used in CFD model

	10K	20K	30K	50K	70K	90K	100K
Specific Heat [J/kg-K]	14.204	28.428	41.098	62.048	78.548	91.914	97.701
Thermal Conductivity [W/mK]	1.573	8.854	33.445	18.838	298.295	433.334	492.198
Density [kg/m^3]				2700			

where ε is the porosity of the medium, k_s is the solid medium thermal conductivity, and $\hat{k}_f$ is the fluid thermal conductivity.

$$\hat{\rho} = \varepsilon\hat{\rho}_f + (1-\varepsilon)\hat{\rho}_s \tag{2}$$

where $\hat{\rho}_s$ is the density of the solid medium, and $\hat{\rho}_f$ is the density of the fluid.

The ANSYS Fluent package is equipped to simulate porous regions in fluid flow using viscous and internal resistance coefficients. For PocoFoam, density, heat capacity and thermal conductivity valid at ambient conditions have been published by PocoGraphite [4]. The literature surveyed for this study did not uncover data on thermal characteristics at cryogenic temperature ranges. Since ANSYS Fluent scales thermal conductivity based on porosity, as indicated in Eq. (1), the published thermal conductivity and porosity were used to back-calculate an equivalent bulk material thermal conductivity.

Viscous and inertial resistance values for PocoFoam are needed as input parameters for the simulations. For each foam, permeability and Forchheimer coefficients are available in the published literature. Permeability, porosity, and the Forchheimer coefficient can be used in combination with the Ergun equations to calculate values for viscous and inertial flow resistance. The viscous and inertial resistances, represented in Eq. (3) and Eq. (4), were calculated using published values for porosity and average pore diameter.

$$D = \frac{\varepsilon}{\beta} \tag{3}$$

$$C = \frac{2\varepsilon^2 c_f}{\sqrt{\beta}} \tag{4}$$

where β is the calculated permeability and c_f is Forchheimer's inertial coefficient.

Aluminum and copper foams are often compressed to maximize their effectiveness in heat transfer applications. Boomsma [6] documented the flow characteristics of 6061-T6 aluminum, and how compression affected the flow characteristics. Boomsma's reported data for 95 percent porosity aluminum foam compressed by a factor of 6 were used to calculate the permeability and viscous resistance shown in Table 3. Since both 6061-T6 aluminum foam and OFHC copper foam are manufactured by ERG [7] [8], it was assumed that their flow characteristics would be similar. In the ANSYS model, the same flow characteristics were used for both foams, and only the thermal characteristics and density differed.

Table 3. Metal foam material properties used in CFD analysis

Property	Poco©Foam	Aluminum Foam	Copper Foam
Permeability [m^2]	6.13×10^{-10} [5]	2.48×10^{-10} *	2.48×10^{-10}
Forcheimer coefficient	4.46×10^{-1} [5]		
Viscous Resistance [$1/m^2$]	1.34×10^{9}**	2.44×10^{9} *	2.44×10^{9}
Inertial resistance [1/m]	2.42×10^{4}**	8701 [6]	8701
Porosity	0.82 [5]	0.60 [6]	0.60

*calculated from values reported by Boomsma [6]
**calculated from values reported by Poco Graphite, Inc. [4]

COMPUTATIONAL FLUID DYNAMICS MODELING

Numerical Modeling

Each of the four heat exchanger designs was simulated under 130 distinct system configurations. Flow rates of 9 milligrams per second, 2 grams per second and 5 grams per second were studied at 1, 2, 3 and 4 MPa of system pressure. Three cryogenic cooler temperatures were examined: 10K, 20K and 50K. For each cryogenic cooler temperature, inlet fluid temperatures of 2, 5, 10, and 50 K above the cryogenic cooler temperature were studied.

Table 4 outlines the case studies examined for 1MPa and 9 mg/s flow. For each case study, the Reynolds number, calculated at the temperature and pressure of the fluid at the inlet, is given. The standard diameter-based Reynolds number characterizes both the helical model and the inlet zone of the porous heat exchanger designs, since both designs have the same diameter. The pore-based Reynolds number for each foam type is also included. Helium properties were obtained from an online database maintained by NIST [3]. The pore-based Reynolds numbers are proportional to the permeability of the foam. Thus, PocoFoam has the lowest pore-based Reynolds number because it has the lowest permeability.

Table 4. Summary of cases and Reynolds number for 1 MPa, 9 mg/s flow

Inlet Temperature [K]	Cryogenic cooler temperature [K]	Re in open pipe	Re_K for PocoFoam	Re_K for Copper Foam	Re_K for Aluminum Foam
12	10	18061	356	226	226
15	10	16659	242	154	154
20	10	14568	151	96	96
60	10	7882	27	17	17
22	20	13876	130	83	83
25	20	12970	106	67	67
30	20	11742	79	51	51
70	20	7192	21	13	13
52	50	8574	33	21	21
55	50	8297	31	20	20
60	50	7882	27	17	17
100	50	5792	12	8	8

Adiabatic external boundary conditions were used to simulate the vacuum jacket insulation that would be typical in this application. For all four heat exchanger models, the cryogenic cooler contact areas were modeled as adiabatic surfaces. For a basis of comparison, the helical heat exchanger was modeled such that the contact area between the pipe and the heat sink was the same as the contact area between the heat sink and pipe for the foam heat exchanger models.

RESULTS

For each case study, differential pressure, outlet temperature and heat exchanger effectiveness were captured. The effectiveness was computed using the enthalpy at the inlet, outlet, and the enthalpy of helium evaluated at the cold tip temperature according to Eq. (5).

$$\eta = 100 * \frac{h_{in} - h_{out}}{h_{in} - h_{coldtip}} \tag{5}$$

where η is effectiveness, *h* is enthalpy, and subscripts 'in', 'out' and 'coldtip' represent the inlet, outlet and cryogenic cooler, respectively.

In most cases, the effectiveness increased as the temperature difference between the helium at the inlet and the cryogenic cooler increased. Some cases exhibited a change in slope at lower temperature ranges. This phenomenon will be discussed in the case sections below.

Three flow rates were considered. Many existing cryogenically cooled superconductor systems have helium mass flow rates in the two to ten gram per second range; however the published literature on metal foams has indicated that, due to the large viscous and inertial resistance of the foams, slower flow rates tend to be more effective at heat transfer without causing unreasonable pressure drops. A few cases were run at a variety of flow rates to see comparative results. Based on the results of these initial cases, the published literature on metal foams and the typical flow rates of cryogenic cooling systems, the flow rates of 9 mg/s, 2 g/s and 5 g/s were selected for additional study. For the helical heat exchanger these flow rates were used directly, since a full pipe geometry was modeled. For the metal foam models a half pipe geometry with a symmetry condition was modeled. In order to model the same flow rates, the flow rates were reduced by one half. A typical flow profile for the PocoFoam heat exchanger model is shown in Figure 3. Effectiveness results for 2MPa system pressure at 9 mg/s, 2, and 5 g/s are shown in Figures 4-6. Additional figures and data can be found in [9].

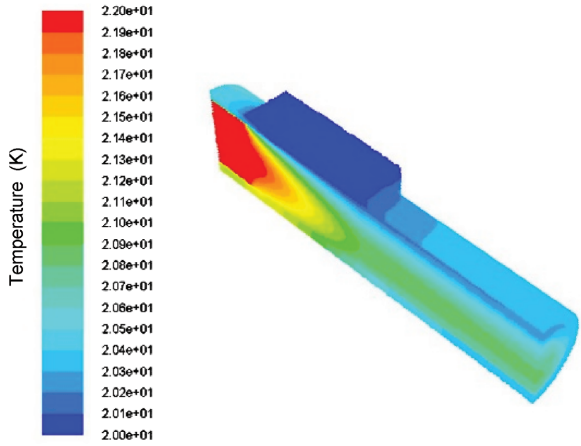

Figure 3. Poco©Foam heat exchanger temperature profile for 22 K inlet, 20 K cryocooler temperature differential and 1 MPa system pressure, 5 g/s flow, Re=77088, Re_K=130.

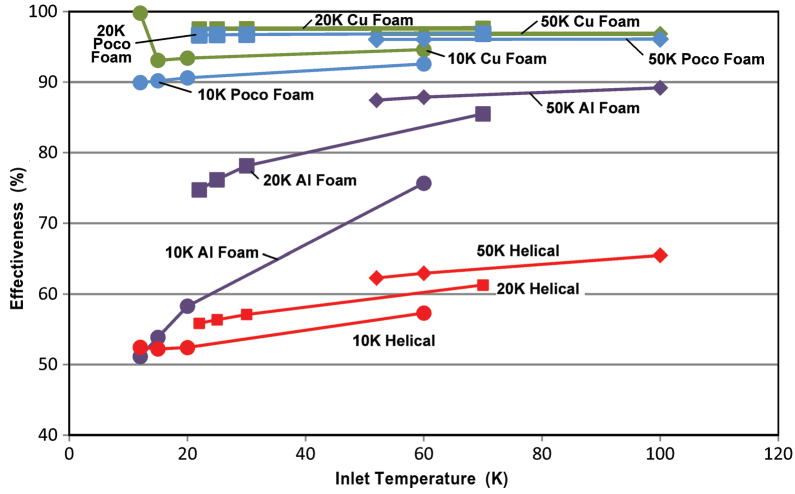

Figure 4. Heat exchanger effectiveness for 2 MPa, 9 mg/s

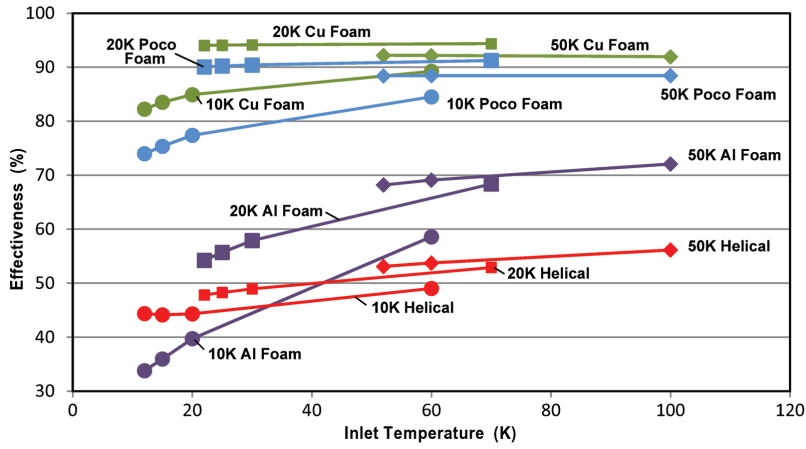

Figure 5. Heat exchanger effectiveness for 2 MPa, 2 g/s flow.

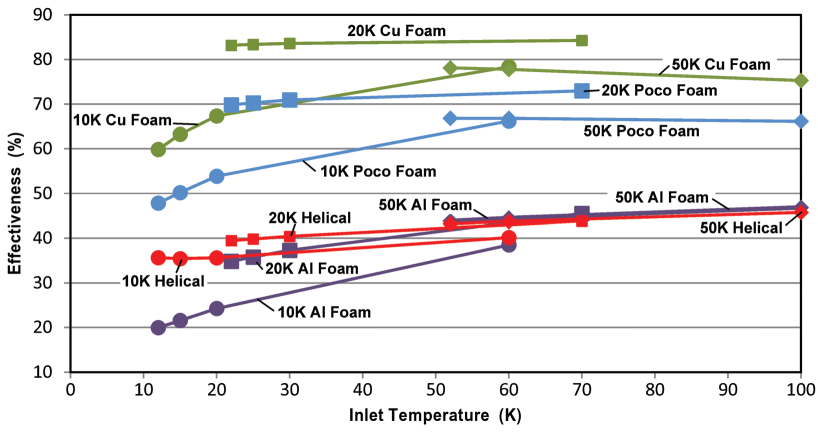

Figure 6. Heat exchanger effectiveness for 2 MPa, 5 g/s

An attempt was made to compare the performance of cryogenic heat exchangers made of porous structures of metal foams and graphite foam with the performance of a conventional heat exchanger based on a helical tube. The results show that larger heat conduction is very advantageous to the foams as it helps the diffusion of heat in the lateral direction. However, the helical coil enjoys the advantage of fluid mixing caused by the curvilinear streamlines that result from the helical geometry. Such macroscopic mixing is of course absent in the foams. The secondary flows that are typical for helical tubes are known to cause mixing in such tubes. The mixing of the fluid helps heat transfer in helical tubes significantly. The simulations confirm this. As a result, comparison between the helical coil and foam heat exchangers is not straightforward and is far from monotonic.

For metal and graphite foams, which are essentially porous structures subject to the flow of a cryogenic gaseous coolant (helium), the effectiveness depends on the mass flow rate, inlet temperature and cold tip temperature. The effect of mass flow rate is particularly important, because as the residence time of the fluid in the porous structure is reduced, the thermal boundary layer that represents the extent of thermal penetration in the fluid and porous structure becomes thinner. This thinning of the thermal boundary layer evidently deteriorates the performance of the heat exchanger because much of the fluid passes through the heat exchanger without cooling. The effectiveness of helical heat exchangers is dependent on the same parameters, but such heat exchangers have significantly lower pressure drops. At high coolant velocities, the helical heat exchanger was more effective than any of the porous heat exchangers studied, but at lower coolant velocities, a heat exchanger using Poco©Foam as a heat transfer element can be significantly more effective than the helical design.

For all foam heat exchangers and the helical heat exchanger, the highest effectiveness was achieved by systems with lower mass flow rates. At low mass flow rates, the copper and graphite foam heat exchangers had the highest effectiveness and lowest pressure drops of all the foam configurations studied.

The graphite and copper heat exchangers performed considerably better than the aluminum and helical heat exchangers. The simulations showed that at low flows, the effectiveness of copper and graphite foam heat exchangers differed by only 1 or 2 percent, but as flow rate increased, copper foam heat exchangers were over 10 percent more effective. This difference in performance is attributed to the comparatively poor out-of-plane conduction of the graphite foam and the reduction of the fluid residence time at higher flow rates.

Because of the changes in helium properties discussed earlier, cryogenic coolers operating below 20 K should be operated at higher system pressures to take advantage of the favorable changes in helium properties at this temperature and pressure. Cryogenic cooling systems operating above 20 K did not show significant changes in effectiveness as system pressure was varied. However, for the metal foam systems, the system differential pressure decreased when the system operating pressure increased.

CONCLUSIONS

Computational Fluid Dynamics (CFD) was used to model cryogenic heat exchangers with porous metal foam inserts. The effectiveness and pressure drop for each of the heat exchangers was examined and compared with a traditional helical coil design. The CFD simulation results show that a metal or graphite foam can reduce heat exchanger weight by up to 95% while simultaneously increasing effectiveness by up to 25%.

REFERENCES

1. Iris Technology and The Georgia Institute of Technology, SBIR Phase I Proposal for: Lightweight Efficient Cryogenic Gas Heat Exchanger.
2. ANSYS, Inc., ANSYS Fluent Theory Guide, Canonsburg, PA: ANSYS, Inc., 2012.
3. NIST [Online]: http://cryogenics.nist.gov/MPropsMAY/OFHC%20Copper/OFHC_Copper_rev.htm#sh. [Accessed 20 February 2013].

4. Poco Graphite, Inc., "PocoGraphite Thermal Management Material," Poco Graphite, Inc., Decatur, TX (2008).

5. Straatman, A.G., Gallego, N.C., Yu, Q., and Thompson, B. E., "Characterization of Porous Carbon Foam as a Material for Compact Recuperators," *Journal of Engineering for Gas Turbines and Power* (2007), pp. 326-330.

6. Boomsma, K., and Poulikakos, D., "On the effective thermal conductivity of a three dimensionally structured fluid saturated metal foam," *International Journal of Heat and Mass Transfer*, vol. 44 (2001), pp. 827-836.

7. ERG Aerospace Corporation, "Physical Characteristics of Duocel Aluminum Foam."

8. ERG Aerospace Corporation, "Characteristics of Duocel Copper Foam."

9. Keltner, N.J., "Study of PocoFoam as a Heat Exchanger Element in Cryogenic Applications," Masters Thesis, Georgia Institute of Technology, Atlanta (2013).